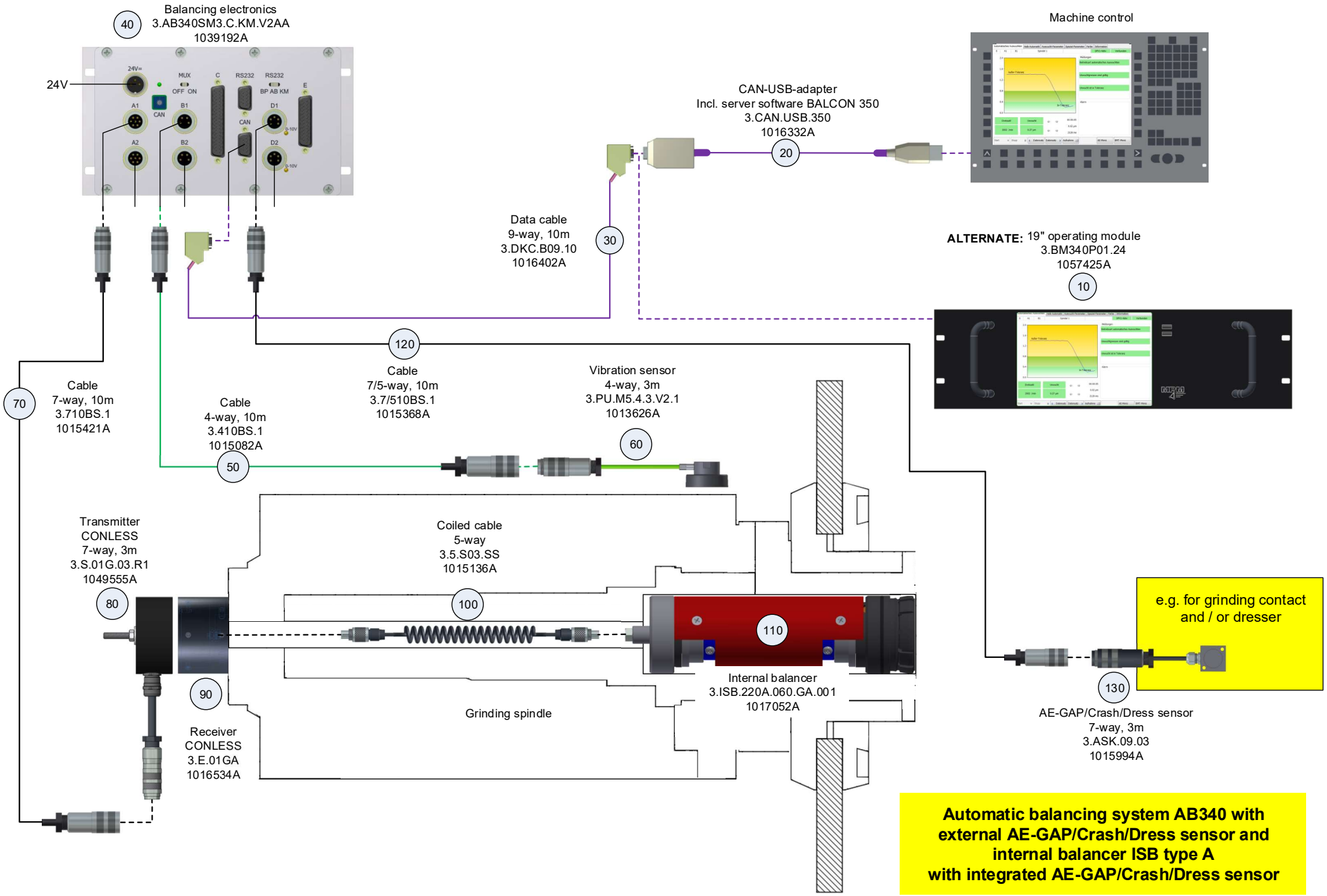
Balancing electronics
3.AB340SM3.C.KM.V2AA
1039192A
40
24V
Machine control
CAN-USB-adapter
Incl. server software BALCON 350
3.CAN.USB.350
1016332A
20
Data cable
9-way, 10m
3.DKC.B09.10
1016402A
30
ALTERNATE: 19" operating module
3.BM340P01.24
1057425A
10
120
Cable
7/5-way, 10m
3.7/510BS.1
1015368A
Vibration sensor
4-way, 3m
3.PU.M5.4.3.V2.1
1013626A
60
70
Cable
7-way, 10m
3.710BS.1
1015421A
Cable
4-way, 10m
3.410BS.1
1015082A
50
Transmitter
CONLESS
7-way, 3m
3.S.01G.03.R1
1049555A
80
Coiled cable
5-way
3.5.S03.SS
1015136A
100
110
Internal balancer
3.ISB.220A.060.GA.001
1017052A
Grinding spindle
90
Receiver
CONLESS
3.E.01GA
1016534A
e.g. for grinding contact
and / or dresser
130
AE-GAP/Crash/Dress sensor
7-way, 3m
3.ASK.09.03
1015994A
Automatic balancing system AB340 with
external AE-GAP/Crash/Dress sensor and
internal balancer ISB type A
with integrated AE-GAP/Crash/Dress sensor